Issue #6
December 1984

Ve Zee News

Registered by Australia Post
Publication No. SBG0711

Return Address
30 Seventh Ave.
Cheltenham S.A. 5014

Merry Christmas and a happy New Year to all you Ve Zee News readers. For once I think I have actually included everything promised in this issue. There was not enough time to type all the things I had planned so please excuse the hand written contribution from Barry Hubble. Barry is a neat writer so I don't think you will have trouble reading it.

To all those of you who have written to me in the last month or so and are still waiting for a reply, I must apologize. With Christmas round the corner I have been flat out just getting the newsletter ready. I plan to use the holiday break to answer you all.

John

ARE YOU AWARE THAT MORE THAN ONE BASIC PROGRAM MAY BE LOADED AND RUN? THIS IS PARTICULARLY USEFUL WHEN USING UTILITIES.

THE METHOD I USE IS AS FOLLOWS:-

1. RUN THE BLOCK TRANSFER PROGRAM
2. CLOAD THE PROGRAM TO BE SHIFTED UP IN MEMORY (PROGRAM 1)
3. ENTER - X = USR(Ø) : POKE 30884, Ø : POKE 30885, 192
4. CLOAD THE SECOND PROGRAM (PROGRAM 2)

YOU MAY NOW RUN EITHER PROGRAM BY POKING 30884/5 WITH THE ADDRESS OF THE ONE REQUIRED.

NOTES:

1. ALWAYS USE A COLD START
2. THE ATTACHED BLOCK TRANSFER PROGRAM IS AN EXAMPLE ONLY. DATA UNDERLINED IN RED SHOULD BE THE LENGTH OF PROGRAM 1 (5ØØH IN THE EXAMPLE). THE DATA UNDERLINED IN BLUE SHOULD BE THE ADDRESS AT WHICH YOU WANT PROGRAM 1 TO START (CØØØ IN EXAMPLE)
3. ENSURE BOTH PROGRAMS TO BE LOADED HAVE THE FIRST LINE AS NON-ESSENTIAL TO THE RUNNING OF THE PROGRAM E.G. REM, CLS, PRINT ETC. IF YOU GET A SYNTAX ERROR ON RUN THEN USE RUN n, WHERE n IS THE SECOND LINE OF THE PROGRAM.
4. DO NOT ATTEMPT TO EDIT PROGRAM 1. A CRASH WILL RESULT.
5. PLAN YOUR MEMORY LOCATIONS WELL EG. BEWARE DIM VARIABLES, CLEAR STATEMENTS ETC WITHIN THE PROGRAMS.
6. THE BLOCK TRANSFER DATA CAN BE PUT ANYWHERE WHERE IT WON'T INTERFERE WITH PROGRAM 1.
7. ALTHOUGH I HAVEN'T TRIED IT, MORE THAN TWO PROGRAMS COULD BE USED AND THE LOT ALSO SAVED ON TAPE. THIS LATTER BY POKING 30969/70 WITH AN ADDRESS = TO THE END OF THE HIGHEST PROGRAM AND POKING 30884, 233 : 30885, 122. FOR THE START OF THE LOWEST PROGRAM.

SEE PAGE 5 FOR PROGRAM

Last time we looked at several ways to perform a similar task --- to fill part or all ofthe screen with a required character (especially a 00H or blank).

This month I want to look more closely at some aspects of the first and second routines described last month, highlighting some of the unwritten conventions or common usages of Z80 registers.

The General Purpose Register Pairs

As stated in the first tutorial, these may hold a 16 bit address. The HL register pair is so named for it may contain the High byte/Low byte parts of an address in that order. This register is by convention often used to hold the 16 bit memory address of data in memory and so has a POINTER function.

So data can be loaded into the accumulator by LD A,(HL) or 7E and the data in the address pointed to by HL is transferred to the accumulator. If for example HL contained or 'pointed to' address 7800H and it contained FAH, then after the execution of this command, A would contain FA.

The address number contained in HL may be increased or decreased by one by the INC HL (23H) or DEC HL (2BH) commands. After 23then A may be loaded with the byte in address 7801. This is very efficient and coupled with the fact that you can also INC (HL) or (34) then HL should be used as much as possible especially in loops. By the way what about INC (HL)? Remember, put crudely brackets means memory not register contents. In the above example where HL contains 7800, the address containing FA, INC (HL) would NOT change HL contents to 7801, but would change the value in 7800 to FB! Is that clear?

BC and DE are not this flexible holding addresses, and by convention the BC register is used for loop counting.

The Other 16 Bit Registers.

As well as the alternate register set, mentioned earlier, we have the SP (stack pointer) PC (programme counter)
IX (index register X) IY (index register Y).

The PC or programme counter is reset to zero by pin 26 (the RESET

pin) on the Z80 chip. It counts up one each command to a maximum of FFFFHex or 65535Dec.

The SP holds an address in memory which can be used for stack purposes. It is loaded in by the programmer, or is set up by the MONITOR in ROM.
It usually holds the memory address being used for the temporary storage of register contents especially with CALLs, and PUSHes . Also put two bytes on this stack. When a byte is put on the stack, the effect is to 'DEC SP' so the stack grows 'downwards' or smaller.

Looking at last month's programme I tried to do the right thing! HL did point to an address then was incremented to move to the next address. ...PHEW !!!!
I'm not going to discuss the IX and IY registers yet! Anyway it will take too long to read up! ! !

The Flags

I refer you to the first tutorial, where I mapped out the bits of the F register, showing that two were unused and six employed as flags. Also, in last month's second programme we have the operand JR,NZ LOOP or 20 nn.
Again they are:

b7[S] b6[Z] b4[H or aC] b2[P/O] b1[N] b0[C].

1. Sign Flag.

This like the other flags are altered after logical and arithmetic operations are carried out -- operations like:
ADD ADC SUB SBC AND OR XOR CP, and so on.
This sign flag is set to 1 if the 7th bit of the A register, in which all the above operands are carried out, is set as the result of a logical or arithmetic operation -- this interprets the number (if signed) as negative. This sign bit is NOT set with normal loads into A, the accumulator.

2. Zero Flag

This zero bit (easier to understand), is set (is 1), if the accumulator contains 0 following a logical or arithmetic operation. It is reset to 0 if an A compare is NOT zero. Careful !!!! See how useful this is with conditional branches or loops until the accumulator is zero. So we have:
JR Z,nn JR NZ,nn CALL Z,address JP Z,address

JP NZ,address.
and so on. (of course other flags may be used as conditions for jumps but zero and not zero are perhaps the most commonly used ones).

3. Auxiliary Carry ('half') Status Flag.

I will mention this for completeness for it is used with BCD or binary coded decimal number operations, with the DAA command.

EXCITING ISN'T IT !!!!!!!!!!!!!!!!!!!

4. The Parity/Overflow Flag.

Here we go again! When you are adding or subtracting using unsigned numbers (not + or -), it can be ignored. However with signed numbers this may indicate overflow, such as when the signed number in the A register is more than +127 or less than -128.
A usual example is adding +127 and +100. The answer of +227 (because of the SIGN) will not fit in 8 bits and the result (at first looking like -29), would seem wrong. The CPU flags this overflow and by looking at this 2nd bit in the F register you can pick this up.

Also there is the parity use. When XOR, AND, or OR is carried out the flag is set to 1 if the parity of the byte in A is even, and 0 if the byte is odd. But we are not writing serial data transmission programmes for a long long time....

Therefore don't worry about this flag too much.....

VZ 200 8K. RAM/ROM/EPROM BOARD L.A. VILLANI.

It is now well known that the Basic in ROM for the V.Z. 200 is a modified Microsoft LII. (as used in the T.R.S. 80 Model I) and that apart from a rewrite of the CSAVE and CLOAD and the addition of Colour, Copy, Sound, etc; the modifications either by design or just good fortune left intact most of the routines that were present in the original Microsoft basic (such as Auto, Delete, Tron, Troff) as recent articles in E.T.I. and user magazines point out. It should be mentioned that sections of the ROM have been extensively changed or deleted, but this is of no concern as long as your intention is to modify the Reserved Word List.

Assuming that you are curious (or stupid) the challenge becomes how to get these and other commands back; considering that apart from an Eprom-burner you need to have a method of altering the original code ie., 8K of reservable memory. So, the avenues that are open are as follows: -

1. Write various routines or programmes to reinstate the missing tokens or access the internal routines directly.
2. Remove ROM Ø and read it, change it, burn an Eprom and reinstall in place of the original ROM.
3. Move the Basic into memory, modify it and return to location.
4. Pretend the extra commands do not exist.

1. is messy and tedious and some routines are very difficult to use. 2. the best and easiest way providing you have the necessary equipment. 3. this is the approach that I selected, mainly because it involves very little modification to the CPU and at the same time does all that is required in a versatile manner. 4. Too traumatic to contemplate.

Bear in mind that replacing or moving any of the reserved word can be fraught with disaster, done carefully it should present no great problem.

Also bear in mind that each beginning letter of any Reserved Word must have 128 (80H) added to it's Ascii value, so that bit 8 will be on and that each word position is used as an index into the Verb Action List, so if you move a word or add a new one then this list must also be altered to point to the correct address.

As an example and assuming that you have managed everything correctly ROM should be now in RAM. You now, instead of V2.0 would prefer to have V2.2 then carefully close switch 8 and then Poke 297, 50, open switch 8 and power down.

Power up, and if you Poked correctly you will [illegible]

It doesn't take much to understand that the whole Basic could be changed in this manner and in fact this is how the token list at 1650H is re-instated.

Try the following:-

Close switch 8 and then Poke 173C, 193: Poke 173D, with 8 in: Poke 173E, 84: Poke 173F, 79. Open switch 8 and type in Auto 10,2 and enter. You now have returned the Auto command. The rest of the List is accessed in the same manner using a suitable program.

The board has been in operation since mid October and at the time of writing there have been no problems.

CIRCUIT DESCRIPTION

The circuit enables the board to be used as either straight System RAM, 8K of non volatile RAM or 8K of alterable ROM and as an added extra can be used as an 8K Eprom board.

When used as System RAM, IC1 decodes for locations E000 to FFFF and when used as ROM, IC3 decodes for locations 0000 to 1FFF. For locations E000 - FFFF, A15, A14 are high and MRQ is low. For the decoder to be enabled pins 4 and 5 must be low and pin 6 high. This results in A15 to pin 5, A14 is inverted to pin 6 and MRQ to pin 4 which enables IC1 only in the required area. A11, 12, and 13 are used to split the 8K into 2K blocks. The decoder actually decodes 16K into 2K blocks but we need only the last four outputs.

The rest is straightforward. The $\overline{WE}(\overline{WR})$ and $\overline{OE}(\overline{RD})$ lines are taked high via 4K7 resistors to the battery line ONLY.

The $\overline{CS}$ lines are also taken high to the battery line ONLY. This is done so that when battery back-up is used the 6116 will go into Standby mode and therefore consume very little power. Without the resitors the power consumption jumps quite markedly. The diodes isolate the RAM supply from the decoder and inverter and isolates the battery from the CPU +5 volts.

When using the board as ROM, the major change is the use of a new signal developed from the 74LS139 that is internal to the machine.

A modification, involving the cutting of the trace between pin 4 of the LS139 and pin 22 of ROM Ø (U9) and attaching wires to either side of the cut and taking the signal from pin 4 (U3) to pin 34 on the expansion Bus and the wire from pin 22 of U9 to pin 42 on the expansion connector the trace cut is best made as per the diagram. There is a pad with a plated through hole on either side of pin 22, the place to cut is the trace that goes from pin 22 towards the right as you look at the pins from the copper side. Cut about midway between the pin and the plated through hole.

At this stage it might be pointed out that pins 22 and 20 are shown transposed on the circuit diagram as per the VZ Tech. Manual.

It will pay , in the long run, to attach a switch in parallel with pins 34 and 42, at the EXPANSION connector thereby allowing the machine to operate as standard.

The new signal is designated RQ(34) on the diagram and the return line as RØS (42).

This signal is low for the entire block, 0000-1FFF and so is inverted and fed to pin 6 of IC3 which will be active only when that area is selected by the CPU. A11, A12, A13 perform the same functions as before only this time the first four outputs are used.

If you think about it, it is possible to use the decoder system for the entire 16K block of ROM, leaving open the possibility of modifying the entire ROM.

If the unit is to be used as an Eprom board the diodes are removed and links installed in their place. The pull-up resistors can go as can the 100K,as can, IC1, the batteries and the LED; but of course the versatility will be gone. If left as is, the only major change required will be to replace the diodes with links and give 5V to pin 21 of the Eproms. The Dipswitch allows for this. The batteries of course should be removed.

SETTING THE DIPSWITCHES.

For use as non-volatile RAM you will need to isolate the 8K block by disabling or not having installed a 2K section below E000. The CPU will not see the block on power-up and so pretends it's not there, leaving users quite free to use the block as they see fit. New or Clear do not affect the area. Once the sytem is initialised, switch 8 may be closed and the RAM accessed as normal memory. After you have decided on what to store in RAM, open switch 8, close switch 7 and you can then power-down and if all is well when you power-up the data should still be there. The board can, at this stage, be removed from the CPU and carried about without any corruption of data.

To use as ROM, make the modification to the CPU board and proceed gingerly.

If, for arguments sake, let's say that you wish to move the entire block of ROM from 0000-1FFF then this is how to do it:-

First set up the board as RAM (refer diagram) then use either a Basic loader or 'VZ Debug' to move the block into RAM at E000-FFFF. Switch off switch 8, make sure that switch 7 is closed, power-down and wait approx. 30 seconds; open switch 4-close switch 3- open switch 2 - close switch 1, IN THAT ORDER, power-up. If all is well you now have the first 8K of Basic working from the RAM/ROM board. Nothing will have changed, except that the origianl ROM is now

swit ched out.

To alter the Basic all that is necessary is to close switch 8, make your changes and open again.

Full switching details are given on the circuit diagram and should enable you to change to any of the required modes.

FROM PAGE 1

```
10 REM  THIS PROGRAM CONTAINS THE BLOCK TRANSFER DATA
20 FORM=-20480TO-20469:READA:POKEM,A:NEXT
30 POKE30862,0:POKE30863,176
40 CLOAD:REM  PROGRAM TO BE SHIFTED TO HIGH MEMORY
50 DATA1,0,5,17,0,192,33,233,122,237,176,201
        RED     BLUE
```

```
VZ-200 Z-80 DISASSEMBLER V 1.0

B000:010005    LD   BC,0500     ???
B003:1100C0    LD   DE,C000     ???
B006:21E97A    LD   HL,7AE9     !?z
B009:EDB0      LDIR             ??
B00B:C9        RET              ?
```

FROM P 7

```
2100 DATA A2,BOTSWANA,-22,0,-24,0,A3,REP OF TONGA,-21,0,-175,0
2102 DATA A4,OMAN,22,0,-58,0,A5,BHUTAN,27,3,-90,3
2104 DATA A6,UNITED ARAB EMIRATES,24,0,-54,0,A7,QATAR,25,0,-51,1
2106 DATA A8,LIBERIA,6,3,9,3,A9,BAHRAIN,26,0,-50,3
2108 DATA AM,SPAIN,40,0,4,0,AO,SPAIN,40,0,4,0
2110 DATA AP,PAKISTAN,30,0,-70,0,AX,AUSTRALIA,-25,0,-135,0
2112 DATA AZ5,SOUTH ORKNEY IS,-60,5,45,0,BV,TAIWAN,23,3,-121,0
2114 DATA BY,PEKIN CHINA,39,55,-116,25,C2,NAURU,-0,3,-166,55
2116 DATA C3,ANDORRA,42,7,-1,7,C5,THE GAMBIA,13,0,17,0
2118 DATA C6,BAHAMAS,25,0,77,0,C9,MOZAMBIQUE,-20,0,-35,0
2120 DATA CE,CHILE,-33,0,71,0,CE9,ANTARCTICA,-85,0,75,0
2122 DATA CEOA,EASTER IS,-27,0,109,5,CEOX,SAN FELIX,-27,0,80,2
2124 DATA CEOZ,JUAN FERNANDEZ,-33,5,79,0,CH,CANADA,45,5,76,0
2126 DATA CI1,NEWFOUNDLAND,48,0,57,0,CI2,LABADOR,52,0,60,0
2128 DATA CK,CANADA,51,0,99,0,CM,CUBA,22,5,82,0
2130 DATA CN,MOROCCO,32,0,7,0,CO,CUBA,22,5,82,0
2132 DATA CP,BOLIVIA,-15,0,69,0,CQ,PORTUGAL,38,0,8,0
2134 DATA CR3,GUINEA-BISSAU,17,5,15,0,CR9,MACAO,22,0,-133,5
2136 DATA CR5,SAO TOME & PRINCIPLE,1,5,-7,4
2138 DATA CT,PORTUGAL,38,0,8,0,CT2,AZORES,39,6,31,0
2140 DATA CT3,MADEIRA IS,32,6,17,0,CU,PORTUGAL,38,0,8,0
2142 DATA CW,URUGUAY,-35,0,57,0,CX,URUGUAY,-35,0,57,0
2144 DATA CY,CANADA,45,5,76,0,CYO,ST PAUL IS,47,2,60,1
2146 DATA CZ,CANADA,45,5,76,0,D2,ANGOLA,-12,0,13,6
2148 DATA D3,ANGOLA,-12,0,13,6,D4,REP OF CAPE VERDE,17,0,25,0
2150 DATA D6,COMOROS,-12,0,-43,0,DA,GERMANY,52,5,-13,0
2152 DATA DF,GERMANY,52,5,-13,0,DJ,GERMANY,52,5,-13,0
2154 DATA DK,GERMANY,52,5,-13,0,DL,GERMANY,52,5,-13,0
2156 DATA DM,GER DEM REP,52,5,-13,0,DPO,ANTARCTICA,-85,0,75,0
2158 DATA DT,GER DEM REP,52,5,-13,0,DU,PHILIPPINES,13,0,-122,0
2160 DATA DV,PHILIPPINES,13,0,-122,0,DX,PHILIPPINES,13,0,-122,0
2162 DATA EA,SPAIN,40,5,4,0,EA6,BALEARIC IS,39,5,-3,0
```

MORE DATA ON P 8

VZ~200 RAM~ROM [Non-volatile-8K]

L.A. VIIANI ©1984.

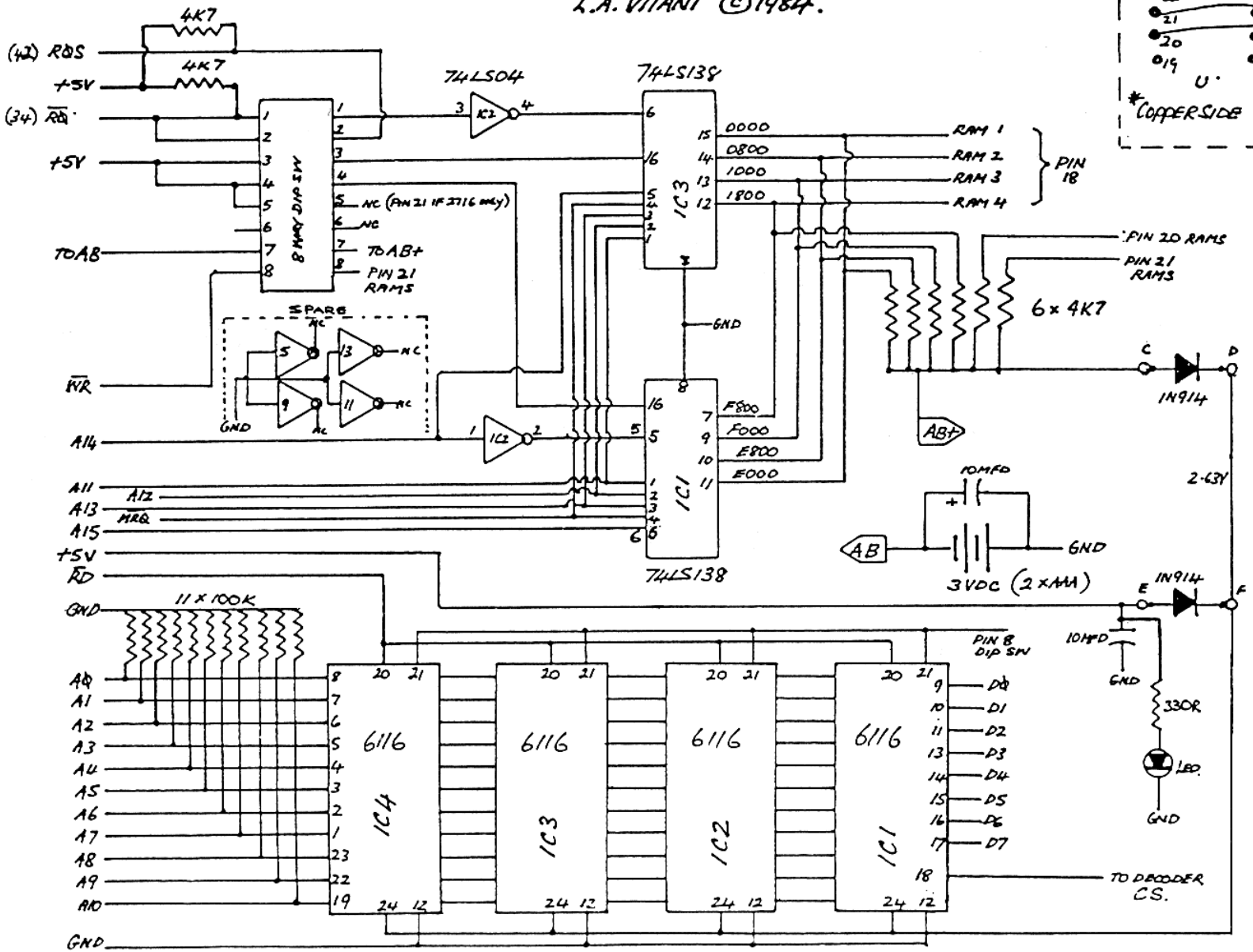

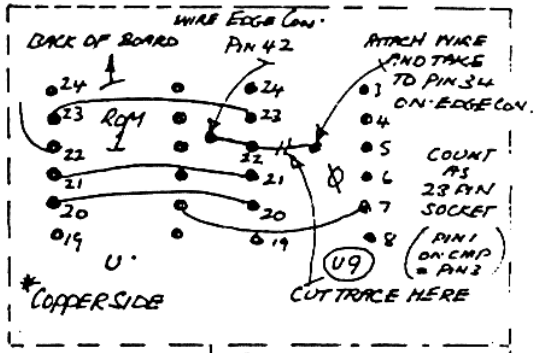

EPROM AT 0000 - 1FFF

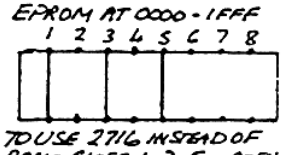

TO USE 2716 INSTEAD OF RAM - CLOSE 1, 3, 5 - OPEN 7 AND 8 - REMOVE DIODES AT C-D, E-F AND LINK SAME

0000 TO 1FFF.

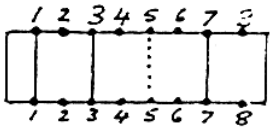

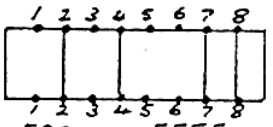

E000 TO FFFF

DIP SWITCH MODES

TO CHANGE FROM RAM TO ROM - OPEN SW8. SWITCH OFF COMPUTER OPEN SW4, CLOSE 3 OPEN SW2, CLOSE 1 IN THAT ORDER -

WHEN USED AS 'ROM' DATA CAN BE CHANGED BY CLOSING SW8. BE SURE TO OPEN BEFORE POWERING DOWN.

ALKALINE BATTERIES SHOULD BE USED (AAA)

IF YOU ARE A DX ENTHUSIAST THEN YOU MAY HAVE SEEN THE BEAM HEADING CALCULATOR IN E.T.I FEB 84 FOR THE VIC-20 WHERE YOU ENTER YOUR CORDINATES THEN A REMOTE QTH AND GET A BEAM HEADING IN DEGREES AND DISTANCE IN KILOMETRES
WELL THIS PROGRAM HAS BEEN REWRITTEN FOR THE VZ 200 BUT YOU HAVE A SECOND OPTION WHERE BY JUST ENTERING THE COUNTRY DX CALL SIGN THE COMPUTER WILL SEARCH THROUGH THE DATA LIST FOR A MATCH AND LOAD THE CORDINATES FOR YOU THEN GIVE YOU ALL THE INFORMATION YOU WANT. FOR AUSTRALIAN CALL SIGNS IT IS BEST TO USE THE FIRST OPTION AS ONLY GIVING A CENTRAL LOCATION FOR COUNTRIES OUT SIDE AUSTRALIA TO BEAM INTO DEPENDING ON YOUR LOCATION IN RELATION TO THE TRANSMITTER YOU MAY BE POINTING THE BEAM IN THE WRONG DIRECTION..
THE ONLY THING TO REMEMBER IS ONE RULE
LATITUDES NORTH OF THE EQUATOR ARE POSITIVE.SOUTH ARE NEGETIVE
LONGITUDES WEST ARE POSITIVE. EAST ARE NEGETIVE.

by. R. Davis

```
 2 CLS:P=3.1428571
4 PRINT TAB(4)'THIS PROGRAM CALCULATES'
6 PRINT TAB(3)'THE DISTANCE IN KILOMETERS'
8 PRINT TAB(4)'AND THE ANTENNA BEARINGS'
10 PRINT TAB(3)'TO THE SELECTED DX COUNTRY'
12 PRINT:PRINT TAB(6)'ENTER YOUR CORDINATES':DIM A(2,2)
14 GOSUB 1000:FOR N=1 TO 2
16 PRINT A$(N) B$(1):PRINT C$(N):PRINTC$
18 INPUT Z1,Z2:GOSUB 2000:A(1,N)=X1
20 NEXT
22 INPUT'0=YOUR SELECTION   1=DX LIST',A
24 IF A=1 THEN 230
40 I=2:FOR J=1 TO 2
50 CLS:PRINT CHR$(28)A$(J) B$(I):PRINT C$,
60 PRINT:PRINT C$(J):PRINT:INPUT Z1,Z2:GOSUB 2000
70 A(I,J)=X1:NEXT
72 GOSUB 80:CLS:GOSUB 900:GOTO40
80 X1=SIN(A(1,1))*SIN(A(2,1))
90 X1=X1+COS(A(1,1))*COS(A(2,1))*COS(A(2,2)-A(1,2))
100 X1=SQR(1-X1*X1)/X1
110 X2=ATN(X1):IF X1<0 THEN X2=P+X2
120 D1=6370.15*X2:D2=40212.38-D1
130 X3=SIN(A(2,1))-SIN(A(1,1))*COS(X2)
140 X3=X3/(SIN(X2)*COS(A(1,1)))
150 IF ABS(X3)>.999 THEN X3=.999XSGN(X3)
160 X4=SQR(1-X3*X3)/X3:X3=ATN(X4)
170 IF X4<0 THEN X3=X3+P
180 IF SIN(A(2,2)-A(1,2))>=0 THEN X3=2*P-X3
190 IF X3<0 THEN X3=P+X3
200 X3=X3*180/P
210 X5=X3+180:IF X5>360 THEN X5=X5-360
220 RETURN
230 CLS:INPUT'ENTER THE DX COUNTRY CALL SIGN',A$:RESTORE
235 FORN=1TO478:READ S$,C$,Z1,Z2,L,LM
240 IF A$<>S$ THEN NEXT ELSE GOTO260
245 PRINT'NOT IN MY LIST':FORN=1TO1000:NEXT:GOTO 230
260 GOSUB 2000:A(2,1)=X1:GOSUB 80
265 Z1=L:Z2=LM:GOSUB2000:A(2,2)=X1:GOSUB80
270 PRINTC$
280 GOSUB 900:GOTO 230
900 PRINT'SHORT PATH BEARING 'INT(X3+.5)' DEGREES'
910 PRINT'DISTANCE 'INT(D1+.5)' KILOMETRES'
920 PRINT:PRINT:PRINT
930 PRINT'LONG PATH BEARING 'INT(X5+.5)' DEGREES'
940 PRINT'DISTANCE 'INT(D2+.5)' KILOMETRES'
950 PRINT:PRINT'E=END C=CONTINUE',
960 K$=INKEY$:Q$=INKEY$:IF Q$='' THEN 960
970 IF Q$='E' THEN END
980 IF Q$<>'C' THEN 960
990 RETURN
1000 A$(1)='LATITUDE  '
1010 A$(2)='LONGITUDE  '
1020 B$(1)='YOUR QTH  '
1030 B$(2)='REMOTE QTH  '
1040 C$='DEGREES (COMMA) MINUTES'
1050 C$(1)='+ IF NORTH  - IF SOUTH'
1055 C$(2)='+ IF WEST  - IF EAST'
1060 RETURN
2000 IF ABS(Z1)>360 OR ABS(Z2-30)>30 THEN PRINT'BAD DATA'
2010 X1=(Z1+SGN(Z1)*Z2/60)*P/180
2020 RETURN
```

NOTE
FIRST BLOCK OF DATA IS ON PAGE 5 THE REST IS ON PAGE 8 & 9

```
2164 DATA EA8,CANARY IS,28,0,16,0,EB,SPAIN,40,5,4,0
2166 DATA EA9,CEUTA & MELILLA,35,0,5,5,EH,SPAIN,40,5,4,0
2168 DATA EI,IRELAND,53,0,6,0,EJ,IRELAND,53,0,6,0
2170 DATA EK,EURO RUSSIA,55,0,-37,0,EL,LIBERIA,6,0,10,0
2172 DATA EM4,GEORGIA,42,0,-42,0,EM6,GEORGIA,42,0,-42,0
2174 DATA EN,EURO RUSSIA,55,0,-37,0,ER,UKRAINE,51,0,-30,0
2176 DATA EP,IRAN,25,0,-55,0,ET,ETHIOPIA,15,0,-40,0
2178 DATA EV,UKRAINE,51,0,-30,0,EW,EURO RUSSIA,55,0,-37,0
2180 DATA EX5,UKRAINE,55,0,-30,0,F,FRANCE,49,0,-3,0
2182 DATA FB8W,CROZET,-46,5,-52,0,FB8X,KERGUELEN,-49,0,-69,5
2184 DATA FB8Y,ANTARCTICA,-85,0,75,0,FC,CORSICA,42,0,-9,0
2185 DATA FG,GUADELOUPE,16,0,61,6
2186 DATA FB8Z,AMSTERDAM IS,-38,0,-77,0,FH,MAYOTTE,-12,8,-45,2
2188 DATA FK,NEW CALEDONIA,-22,3,-166,4,FL8,DJIBOUTI,11,6,-43,1
2190 DATA FM,MARTINIQUE,14,7,61,0,GD,ISLE OF MAN,54,0,4,6
2192 DATA FO,FR POLYNESIA-TAHITI,-17,32,149,34
2194 DATA FP,ST PIERRE & MIQUELON,46,8,65,2,GW,WALES,53,0,4,0
2196 DATA FR,REUNION,-21,0,-55,3,FS,ST MARTIN,18,1,63,5
2198 DATA FW,WALLIS & FUTUNA IS,-18,0,-178,5,G,ENGLAND,51,5,0,0
2200 DATA FY,FR GUIANA,5,0,52,4,GB,ENGLAND,51,5,0,0
2202 DATA GI,NORTHERN IRELAND,55,0,6,0,GJ,JERSEY,49,2,2,0
2204 DATA GM,SCOTLAND,56,0,4,0,GU,GUERNSEY,51,0,2,5
2206 DATA H4,SOLOMON IS,-7,0,-157,2,HA,HUNGARY,47,5,-19,0
2208 DATA H5,BOPHTUTHATSWANA,-27,0,-25,0,HC,ECUADOR,0,0,80,0
2209 DATA HB,SWITZERLAND,47,0,-7,5,UK2W,WHITE RUSSIA,54,0,-27,0
2210 DATA HB0,LIECHTENSTEIN,47,0,-10,0,HD,ECUADOR,0,0,80,0
2212 DATA HC8,GALAPAGOS IS,0,0,90,0,HG,HUNGARY,47,5,-19,0
2214 DATA HH,HAITI,18,0,72,0,HI,DOMINICAN REP,18,0,71,0
2216 DATA HK,COLUMBIA,5,0,74,0,HKO,MALPELO IS,4,0,81,6
2218 DATA HL,KOREA,35,1,-129,0,HM,KOREA,35,1,-129,0
2220 DATA HP,PANAMA,9,0,80,0,HR,HONDURAS,14,0,86,0
2222 DATA HS,THAILAND,14,0,-101,0,HV,VATICAN,42,0,-13,0
2224 DATA HW,FRANCE,49,0,-3,0,HZ,SAUDI ARABIA,25,0,-45,0
2226 DATA I,ITALY,42,0,-13,0,IT,ITALY,42,0,-13,0
2228 DATA IS,SARDINIA,40,0,-9,0,J2,DJIBOUTI,11,6,-43,1
2230 DATA J3,GRENADA & DEPENDENCIES,12,0,61,5
2232 DATA J4,GREECE,39,0,-23,8,J5,GUINEA-BISSAU,17,5,15,0
2234 DATA J6,ST LUCIA,13,8,61,0,J7,DOMINICA,15,0,61,0
2236 DATA J8,ST VINCENT & DEP,13,5,61,2,JA,JARAN,35,0,-140,0
2238 DATA JN,JAPAN,35,0,-140,0,JD,OGASAWARA,28,0,-142,0
2240 DATA JP,JAPAN,35,0,-140,0,JT,MONGOLIA,48,0,-108,0
2242 DATA JW,SVALBARD,78,0,-14,2,JX,JAN MAYEN,70,0,8,9
2244 DATA JY,JORDAN,31,5,-35,0,KA,JAPAN,35,0,-140,0
2246 DATA KA1,OGASAWARA,28,0,-142,0,KC4,NAVASSA IS,18,4,75,0
2248 DATA KB,BAKER & PHOENIX IS,0,2,176,5,KG6,GUAM,13,4,-144,6
2250 DATA KC6,MICRONESIA,-10,0,150,2,KH2,GAUM,13,4,-144,6
2252 DATA KG6R,MARIANA IS,19,7,-145,4,KH4,MIDWAY IS,28,2,177,4
2254 DATA KG6S,MARIANA IS,19,7,-145,4,KH9,WAKE IS,19,3,-166,6
2256 DATA KG6T,MARIANA IS,19,7,-145,4,KL7,ALASKA,65,0,147,0
2258 DATA KH1,BAKER & PHOENIX IS,0,2,176,5
2260 DATA KG4,GUANTANAMO BAY,20,0,75,5,KV,VIRGIN IS,18,4,65,0
2262 DATA KH3,JOHNSTON IS,17,0,168,3,KH7,KURE IS,28,25,178,25
2264 DATA KH5,PALMYRA-JARVIS I,5,9,162,2,KP2,VIRGIN IS,18,4,65,0
2268 DATA KH5K,KINGMAN REEF,5,9,162,1,KHO,MARIANA I,19,7,-145,4
2270 DATA KH6,AIEA HAWAII,21,23,157,56
2272 DATA KH8,AMERICAN SAMOA,-13,8,171,8
2274 DATA KJ,JOHNSTON IS,17,0,168,3,KM,MIDWAY IS,28,2,177,4
2276 DATA KP1,NAVASSA IS,18,4,75,0,KP3,SERRANA BNK,14,3,80,4
2278 DATA KP4,PUERTO RICO,18,4,66,1,KS4,SERRANA BNK,14,3,80,4
2280 DATA KW,WAKE IS,19,3,-166,6,KX,MARSHALL IS,10,0,-165,5
2282 DATA L8,AGENTINA,-35,0,58,0,LA,NORWAY,60,0,-10,0
2284 DATA LB,NORWAY,60,0,-10,0,LF,NORWAY,60,0,-10,0
2286 DATA LG,NORWAY,60,0,-10,0,LX,LUXEMBOURG,49,5,-6,2
2288 DATA LJ,NORWAY,60,0,-10,0,LU,ARGENTINA,-35,0,58,0
2290 DATA LZ,BULGARIA,42,0,-26,0,M1,SAN MARINO,44,0,-12,5
2292 DATA OA,PERU,-12,5,77,0,OD,LEBANON,33,5,-35,5
2294 DATA OE,AUSTRIA,48,5,-16,5,OF,FINLAND,60,5,-22,0
2296 DATA OH,FINLAND,60,5,-22,0,OHO,ALAND IS,60,1,-20,0
2298 DATA OJO,MARKET,60,3,-19,1,ON,BELGIUM,50,7,-4,4
2300 DATA OK,CZECHOSLOVAKIA,50,05,14,26,OY,FAROE IS,62,0,6,8
2302 DATA OR4,ANTARCTICA,-85,0,75,0,OX,GREENLAND,65,5,37,5
2304 DATA OZ,DENMARK,56,0,-12,5,PA,NETHERLANDS,52,5,-4,5
2306 DATA P2,PAPUA NEW GUINEA,-9,5,-147,0,PY,BRIZAL,-22,5,47,0
2308 DATA P4,NETHERLAND ANTILLES,17,5,63,0
2310 DATA PD,NETHERLANDS,52,5,-4,5,PE,NETHERLANDS,52,5,-4,5
2312 DATA PF,NETHERLANDS,52,5,-4,5,PG,NETHERLANDS,52,5,-4,5
2314 DATA PI,NETHERLANDS,52,5,-4,5,PZ,SURINAM,6,0,55,0
2316 DATA PJ,NETHERLANDS ANTILLES,17,5,63,0
2318 DATA PYO,ST PETER & ST PAUL ROCKS,1,0,29,4
2320 DATA R3-6,EUROPEAN RUSSIA,55,0,-37,0
2322 DATA RG6,ARMENIA,40,0,-45,0,RU5,UKRAINE RUSSIA,51,0,-30,0
2324 DATA RX7,KAZAKH,48,0,-65,0,S2,BANGLADESH,22,5,-90,0
2326 DATA S4,CISKEI,-27,0,-25,0,S7,SEYCHELLES,-4,5,-55,5
2328 DATA S8,TRANSKEI,-27,0,-25,0,SK,SWEDEN,58,0,-18,0
2330 DATA S9,SAO TOME & PRINCIPLE,1,5,-7,4,SL,SWEDEN,58,0,-18,0
2332 DATA SM,SWEDEN,58,0,-18,0,SN,POLAND,52,5,-21,1
2334 DATA SP,POLAND,52,5,-21,1,ST,SUDAN,15,0,-32,5
2336 DATA STO,SOUTHERN SUDAN,0,5,-31,0,SU,EGYPT,30,1,-32,0
2338 DATA SV,GREECE,39,0,-23,8,T2,TUVALU,-3,7,-165,0
2340 DATA T4,CUBA,22,5,82,0,T7,SAN MARINO,44,0,-12,5
2342 DATA T30,WEST KIRIBATI,0,0,-174,0
2344 DATA T31,CENTRAL KIRIBATI,-4,0,172,0
2346 DATA T32,EAST KIRIBATI,0,05,170,0,TA,TURKEY,40,0,-32,5
2348 DATA TE,COSTA RICA,10,0,84,0,TF,ICELAND,64,1,21,9
2350 DATA TG,GUATEMALA,14,5,90,2,TI,COSTA RICA,10,0,84,0
2352 DATA TI9,COCOS IS,5,5,87,1,TJ,CAMEROONS,4,0,-9,0
2354 DATA TK,FRANCE,49,0,-3,0,TN,CONGO,-5,0,-12,0
2356 DATA TL,CENTRAL AFRICAN REP,5,0,-15,0,TR,GABON,-2,0,-10,0
2358 DATA TT,CHAD,15,0,-20,0,TU,IVORY COAST,5,0,5,0
2360 DATA TY,BENIN,6,0,-2,5,TZ,MALI,12,5,7,5
2362 DATA U2,LATVIA,57,0,-25,0,U3,EUROPEAN RUSSIA,55,0,-37,0
2364 DATA U5,UKRAINE RUSSIA,51,0,-30,0,U6,ARMENIA,40,0,-45,0
2366 DATA U8,TADZHIK,39,0,-70,0,U9,EUROPEAN RUSSIA,55,0,-37,0
2368 DATA UA,EUROPEAN RUSSIA,55,0,-37,0,U18,UZEBK,42,0,-65,0
2370 DATA UA1,FRANZ JOSEPH LAND,81,0,-50,0,UK8,UZBEK,42,0,-65,0
2372 DATA UA2,KALININGRADSK,54,8,-20,6,UK2G,LATVIA,57,0,-25,0
2374 DATA UB,UKRAINE RUSSIA,51,0,-30,0,UF6,GEORGIA,42,0,-42,0
2376 DATA UC2,WHITE RUSSIA,54,0,-27,0,UK2B,LITHUANIA,56,0,-22,0
2378 DATA UD6,AZERBAIJAN,40,0,-47,0,UG6,ARMENIA,40,0,-45,0
2380 DATA UH8,TURKOMAN,40,0,-60,0,UJ8,TADZHIK,39,0,-70,0
2382 DATA UK,ASIATIC R.S.F.S.R,60,0,-110,0
2384 DATA UK1-6,EUROPEAN RUSSIA,55,0,-37,0
```

```
2386 DATA UK2A,WHITE RUSSIA,54,0,-27,0,UK2B,LITHUANIA,56,0,-22,0
2388 DATA UK2C,WHITE RUSSIA,54,0,-27,0,UK2P,LITHUANIA,56,0,-22,0
2390 DATA UK2F,KALININGRADSK,54,8,-21,0
2392 DATA UK2I,WHITE RUSSIA,54,0,-27,0,UK2O,LATVIA,57,0,-25,0
2394 DATA UK2O,WHITE RUSSIA,54,0,-27,0,UK2R,ESTONIA,58,0,-25,0
2396 DATA UK2S,WHITE RUSSIA,54,0,-27,0,UK2T,ESTONIA,58,0,-25,0
2398 DATA UK5O,MOLDAVIA,47,0,-27,0,UK6C,AZERBAIJAN,40,0,-47,0
2400 DATA UK6D,AZERBAIJAN,40,0,-47,0,UK6F,GEORGIA,42,0,-42,0
2402 DATA UK6G,ARMENIA,40,0,-45,0,UK6K,AZERBAIJAN,40,0,-47,0
2404 DATA UK6O,GEORGIA,42,0,-42,0,UK6Q,GEORGIA,42,0,-42,0
2406 DATA UK6V,GEORGIA,42,0,-42,0,UK7,KAZAKH,48,0,-65,0
2408 DATA UK8H,TUKOMAN,40,0,-60,0,UK8J,TADZHIK,39,0,-70,0
2410 DATA UK8M,KIRGHIZ,42,0,-75,0,UK8N,KIRGHIZ,42,0,-75,0
2412 DATA UK8R,TADZHIK,39,0,-70,0,UL7,KAZAKH,48,0,-65,0
2414 DATA UM8,KIRGHIZ,42,0,-75,0,UN1,EUROPEAN RUSSIA,55,0,-37,35
2416 DATA UO5,MOLDAVIA,47,0,-27,0,UP2,LITHUANIA,56,0,-22,0
2418 DATA UQ2,LATVIA,57,0,-25,0,UR2,ESTONIA,58,0,-25,0
2420 DATA UT,UKRAINE RUSSIA,51,0,-30,0,UU2,LITHUANIA,56,0,-22,0
2422 DATA UV,ASIATIC R.S.F.S.R,60,0,-110,0,V9,VENDA,-27,0,-25,0
2424 DATA UW1-6,EUROPEAN RUSSIA,55,0,-37,0,VC,CANADA,45,5,76,0
2426 DATA UW9-0,ASIATIA R.S.F.S.R,60,0,-110,0
2428 DATA UY4,EUROPEAN RUSSIA,55,0,-37,35,W2,NYC,40,42,74,01
2430 DATA UZ4,EUROPEAN RUSSIA,55,0,-37,35,VU,INDIA,19,5,-72,0
2432 DATA UY5,UKRAINE RUSSIA,51,0,-30,0,VY1,CANADA,45,5,76,0
2434 DATA V2,ANTIGUA-BARBUDA,17,6,61,8,VQ9,CHAGOS,-6,6,71,4
2436 DATA V3,BELIZE,13,5,88,5,VE,CANADA,45,5,76,0
2438 DATA VG,CANADA,45,5,76,0,VE1,SABLE IS,43,9,60,0
2440 DATA VK,AUSTRALIA,-34,0,-152,0,VK9,CHRISTMAS IS,2,0,127,5
2442 DATA VK0,MAQUARIE IS,-54,5,-159,0,VO,CANADA,45,5,76,0
2444 DATA VP2A,ANTIGUA,17,1,61,8,VP2D,DOMINICA,15,0,61,0
2446 DATA VP2E,ANGUILLA,18,2,63,1,VP2K,ST KITTS,17,4,62,8
2448 DATA VP2G,GRENADA & DEPENDENCIES,12,0,61,5
2450 DATA VP2L,ST LUCIA,13,8,61,0,VP2M,MONTSERRAT,16,7,62,2
2452 DATA VP2S,ST VINCENT & DEP,13,1,61,2,VP9,BERMUDA,32,2,64,8
2454 DATA VP2V,BRITISH VIRGIN IS,18,8,64,3,W1,BOSTON,42,2,71,0
2456 DATA VP5,TURKS & CAICOS IS,21,5,71,3
2458 DATA VP8,FALKLAND IS,-51,7,58,0,VR8,TUVALU,-3,7,-175,0
2460 DATA VR1,CENTRAL KIRIBATI,-4,0,172,0
2462 DATA VR6,PITCAIN IS,-25,04,130,06,VS5,BRUNEI,4,9,-144,9
2464 DATA VS6,HONG KONG,22,15,-144,11
2466 DATA VU7,LACCADIVE IS,11,5,-73,0
2468 DATA VX1,CANADA (NEWFOUNDLAND),48,30,56,0
2470 DATA VX2,CANADA (LABRADOR),54,0,62,01
2472 DATA W3,PITTSBURG,40,26,80,0,W4,MIAMI,25,48,80,17
2474 DATA W5,DALLAS,32,47,96,48,W6,LOS ANGELES,33,56,118,24
2476 DATA W7,TUCSON,32,13,110,58,W8,DETROIT,42,25,83,01
2478 DATA W9,CHICAGO,41,47,87,38,XE,MEXICO,19,24,99,09
2480 DATA W0,DENVER,39,43,105,01,XF4,REVILLA GIGEDO,19,0,112,0
2482 DATA XJ,CANADA,45,5,76,0,XN,CANADA,45,5,76,0
2484 DATA XO,CANADA,45,5,76,0,XP,GREENLAND,65,5,37,5
2486 DATA XT,UPPER VOLTA,12,0,2,5,XU,CAMBODIA,11,0,-105,0
2488 DATA XV,VIETNAM,12,0,-107,0,XW,LAOS,21,0,-106,0
2490 DATA XZ,BURMA,19,5,93,5,Y2,GERMANY,52,5,-13,0
2492 DATA YA,AFGHANISTAN,34,0,-69,0,YB,INDONESIA,-6,0,-106,4
2494 DATA YC,INDONESIA,-6,0,-106,4,YE,INDONESIA,-6,0,-106,4
2496 DATA YI,IRAQ,33,0,-44,0,YJ,NEW HEBRIDES,-16,0,-167,0
2498 DATA YK,SYRIA,35,5,-36,5,YL3,EUROPEAN RUSSIA,55,0,-37,0
2500 DATA YN,NICARAGUA,12,1,86,5,YO,ROMANIA,44,5,-26,0
2502 DATA YP,ROMANIA,44,5,-26,0,YS,SALVADOR,13,5,89,5
2504 DATA YT,YUGOSLAVIA,45,0,-20,5,YU,YUGOSLAVIA,45,0,-20,5
2506 DATA YV,VENEZUELA,11,0,67,0,YV0,AVES IS,15,7,63,6
2508 DATA YW,VENEZUELA,11,0,67,0,ZA,ALBANIA,41,5,-19,8
2510 DATA ZB,GIBRALTAR,36,1,5,3,ZC,CYPRUS,34,7,-33,0
2512 DATA ZD7,ST HELENA,-15,9,5,7,ZE,ZIMBABWE,-20,0,-30,0
2514 DATA ZD8,ASCENSION IS,-7,9,14,6,ZF,CAYMAN IS,19,8,79,8
2516 DATA ZD9,TRISTAN DA CUNA IS,-37,0,12,3,ZK2,NIUE,-19,0,169,9
2518 DATA ZK1,SO COOK IS,-21,2,159,8,ZK9,NIUE,-19,0,169,9
2520 DATA ZL,NEW ZEALAND,-41,0,-174,0,ZL5,ANTAECTICA,-85,0,75,0
2522 DATA ZL7,CHATHAM IS,-44,0,-177,5,ZP,PARAGUAY,-22,5,57,0
2524 DATA ZM7,TOKELAU IS,-9,2,171,9,ZS3,NAMIBIA,-22,0,-17,0
2526 DATA ZS1,SOUTH AFRICA,-34,0,-18,0,ZV,BRAZIL,-22,5,47,0
2528 DATA ZS2,PRINCE EDWARD & MARION IS,-48,0,-39,0
2530 DATA 1A0,SOV MIL ORDER OF MALTA,42,0,-14,5
2532 DATA 1S1,SPRATLY IS,9,0,-111,9,3A,MONACO,43,7,-7,5
2534 DATA 3B6,AGALEGA & ST BRANDON,-15,0,-57,8
2536 DATA 3B7,AGALEGA & ST BRANDON,-15,0,57,8
2538 DATA 3B8,MURITIUS,-20,1,-57,5,3B9,RODRIGUES,-19,7,-63,4
2540 DATA 3C,EQUATORIAL GUINEA,2,0,-9,0,3C0,ANNOBON,-2,0,-5,0
2542 DATA 3D2,FIJI,-19,0,-177,9,3D6,SWAZILAND,-27,0,-32,0
2544 DATA 3V,TUNISIA,37,0,-10,0,3X,REP OF GUINEA,9,0,13,0
2546 DATA 3Y,BOUVET,-54,4,-3,3,4D,PHILIPPINES,13,0,-122,0
2548 DATA 4J1,FRANZ JOSEPH LAND,81,0,-50,0,4T,PERU,-12,5,77,0
2550 DATA 4K,ANTARCTICA,-85,0,75,0,4N,YUGOSLAVIA,45,0,-20,5
2552 DATA 4K1,USSR ANTARCTICA & SO SHETLAND,-85,0,75,0
2554 DATA 4O,YUGOSLAVIA,45,0,-20,5,4S,SRI LANKA,19,0,-80,5
2556 DATA 4U,I T U GENEVA,46,5,-6,5,4V,HAITI,18,0,72,0
2558 DATA 4W,YEMEN,15,5,-44,0,4X,ISRAEL,32,0,-35,0
2560 DATA 5A,LIBYA,30,0,-18,0,5B,CYPRUS,34,7,-33,0
2562 DATA 5H,TANZANIA,-7,0,-39,0,5J-K,COLUMBIA,5,0,74,0
2564 DATA 5N,NIGERIA,7,0,-3,0,5R,MALAGASY REP,-18,0,-47,5
2566 DATA 5T,MAURITANIA,21,0,12,0,5U,NIGER,14,0,-2,5
2568 DATA 5V,TOGO,6,1,-1,2,5W,WESTERN SAMOA,-14,3,170,7
2570 DATA 5Y,KENYA,-2,0,-37,0,5X,UGANDA,0,5,-32,0
2572 DATA 5Z,KENYA,-2,0,-37,0,7Z,SAUDI ARABIA,25,0,-45,0
2574 DATA 6C,SYRIA,35,5,-36,5,6D-E,MEXICO,19,5,99,0
2576 DATA 6O,SOMALI,7,0,-49,8,6W,SENEGAL,14,7,17,4
2578 DATA 6Y,JAMAICA,18,5,77,9,7O,YEMEN,13,3,43,3
2580 DATA 7P,LESOTHO,-29,0,-27,5,7Q,MALAWI,-13,5,-33,0
2582 DATA 7X,ALGERIA,36,5,-3,0,8J,ANTARCTIA,-85,0,75,0
2586 DATA 8N1,JAPAN,35,0,-140,0,8P,BARBADOS,13,0,59,5
2590 DATA 9A,SAN MARINO,44,0,-12,5,9G,GHANA,5,5,0,2
2592 DATA 9H,MALTA,39,9,-14,5,9I,ZAMBIA,-15,5,-28,0
2594 DATA 9J,ZAMBIA,-15,5,-28,0,9K,KUWAIT,29,1,-48,1
2596 DATA 9L,SIERA LEONE,7,5,13,0,9M2,WEST MALAYSIA,-1,0,-102,0
2598 DATA 9M6,EAST MALAYSIA,-7,0,-110,0,9N,NEPAL,27,0,-86,0
2600 DATA 9Q,ZAIRE,-5,0,-25,0,9U,BURUNDI,-3,0,-28,0
2602 DATA 9V,SINGAPORE,1,3,-103,8,9X,RWANDA,-2,5,-30,0
2604 DATA 9Y,TRINIDAD & TOBAGO,10,5,61,0
2784 DATA 8J1,JAP ANTARCTIA,-85,0,75,0,8JO-5,JAPAN,35,0,-140,0
2788 DATA 8Q,MALDIVE IS,4,2,-73,5,8R,GUYANA,7,0,58,0
```

```
READY
1?A-C
POKE31469,155
READY
100 INPUTA,B
120 C=A*B
140 LPRINTA;"*";B;"=";C
160 GOTO100
```

```
278856 * 251 = 69992856
2788560 * 251 = 699928560
278856000000 * 2.51 = 699928560000
27885600 * 2.51 = 69992856
```

```
278856 * 2.51 = 699928.5625
27885.6 * 25.1 = 699928.5625
27885.6 * 2.51 = 69992.8515625
2788.56 * 251 = 699928.5625
2.78856 * 2.51 = 6.99928617477417
278856 * 251 = 69992856
2.78856E+06 * 251 = 699928576
```

```
1 DEFDBL A-C
100 INPUTA,B
110 A2=A:B1=B:A1=1
120 GOSUB1000
140 C=(A2*B1)/A1
150 LPRINTA;"*";B;"=";C
160 GOTO100
1000 IFA2=INT(A2)THENGOTO2000
1010 A2=A2*10:A1=A1*10
1020 GOTO1000
2000 IFB1=INT(B1)THENRETURN
2010 B1=B1*10:A1=A1*10
2020 GOTO2000
```

```
278856 * 2.51 = 699928.56
```

```
278856 * 2.51 = 699928.56
278.856 * .251 = 69.992856
2.78856 * 25.1 = 69.99285600000001
```

Many readers have made use of the VZ 200's double precision capability but how many of you actualy checked that the results were correct, I didn't.

Fortunately one reader does not take everything a computer does at face value and has found a "bug" in the multiplication routine.

The printout at the left shows the problem and one way of solving it. The short program at the top defines variables A to C as double precision, requests the input of 2 numbers, multiplies them and prints the double precision result.

As you can see from the samples everything is fine as long as the answer does not have any numbers to the right of the decimal point. However if the answer is not a whole number things aren't quite correct. What is more the answer is wrong by different amounts depending on how many numbers are to the right of the decimal point.

No such errors have been noted with double precision addition, subtraction or division so the bug is in some part of the software that is unique to multiplication. Now multiplication is the only action that will generate an intermediate result with 32 significant figures and I think the bug is in the routine that converts this number to a decimal number. It seems that if the intermediate result is not a whole number the routine can not handle it correctly.

The way to get around this problem is to make sure all double precision multiplication gives only whole numbers. This may seem a bit restrictive at first but all you need to do is add lines 1000 to 2020 as a subroutine and call it as shown in the second program at the left. The subroutine multiplies the two numbers by 10 until both are whole numbers then after doing the multiplication the result is divided by a number equal to the number it was multiplied by in the subroutine.

As you can see by the example, this works quite well. I think we can put up with 1 part in 7000000000000000 error.

C John Waters December 1984

All material in Ve Zee News is subject to copyright.
Contributed programs are reproduced with permission and on the understanding that they are for private use of subscibers only.
Copyright is retained by the authors.